MEROBEL Fabricant

LC Ampli STD

Réf : 336 410 02

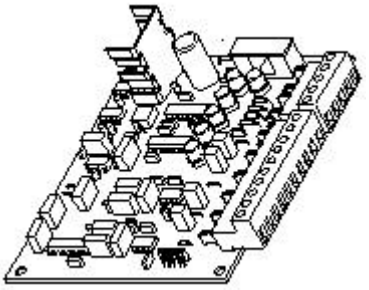

Features :

Input Voltage	[V]	24 AC/DC
Max power consumption	[VA]	3
Strain gages bridge supply	[V]	10 DC
Output voltage	[V]	0 to 10 DC
Current (output voltage)	[mA]	< 5
Zero compensation		± 50% of FS
Measurement sensibility		50 mV / V
Time drift		< 1%
Room temperature	[°C] -	10 to +40

Principle :

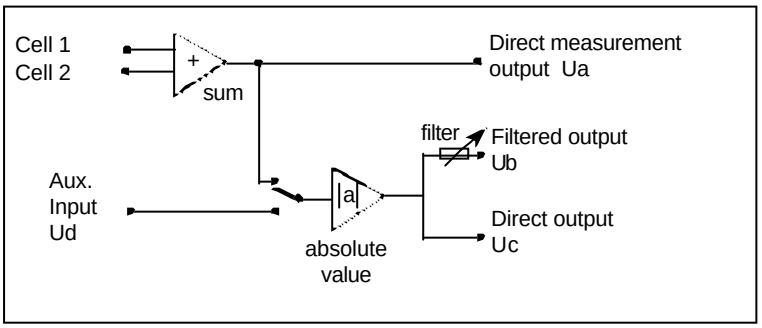

Offers :

- 24 V AC or DC
- Absolute value function : to always deliver a positive output, even if force (or torque) has a negative orientation
- Easy calibration procedure with Merobel load cells and torque sensors
- Two outputs (one with an adjustable filter)
- May be used with one or two cells
- Easy external display calibration
- Power-on whitness
- Compact design
- 4 - 20 mA remote control (on request)
- Plug-in connector
- DIN rail mounting option available
- E.M.C requirements compatibility

Dimensions :

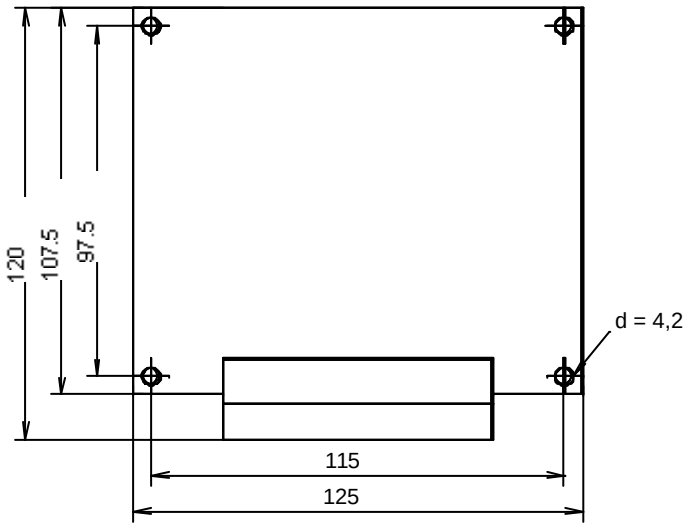

High = 35

MEROBEL

LC Ampli STD Ref : 336 410 02

Connections

1 Supply sensor 1 (10 VDC)
2 Signal sensor 1 (+)
3 0 V
4 Signal sensor 1 (-)
5 Supply sensor 2 (10 VDC)
6 Signal sensor 2 (+)
7 0 V
8 Signal sensor 2 (-)
9 Input auxilliary signal Ud (-10 -> +10 VDC)
10 0 V
11 Output signal Ua (-10 -> 10 VDC)
12 Output signal filtered Ub (0 -> 10 VDC)
13 Output signal unfiltered Uc (0 -> 10 VDC)
14 0 V
15 Supply 24 V AC/DC

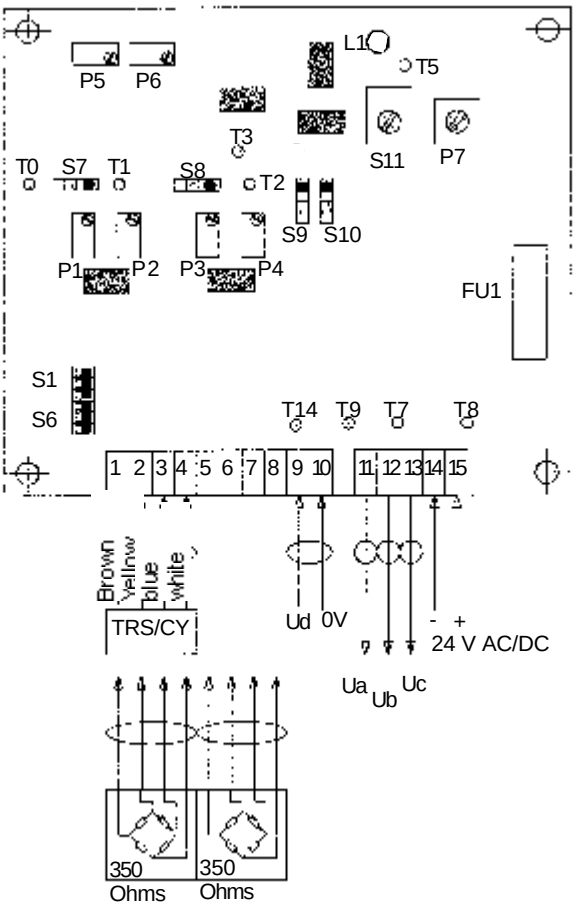

Test Points and Leds

T0 0 V
T1 Direct output sensor 1
T2 Direct output sensor 2
T3 Sum output Sensor 1 + Sensor 2
T5 Absolute value output
T7 Output signal filtered Ub (0 -> 10 VDC)
T8 Output signal unfiltered Uc (0 -> 10 VDC)
T9 Output signal direct Ua (-10 -> 10 VDC)
T14 Input auxilliary signal Ud (-10 -> 10 VDC)
L1 Power ON 24 V AC/DC

Potentiometers and Switches

P1	Offset measurement cell 1	P6	Gain measures sum
P2	Gain measurement cell 1	P7	Filter adjustment
P3	Offset measurement cell 2	S1 to S6	Switch for Merobel cell calibration
P4	Gain measurement cell 2	S7 to S10	Function selection switches
P5	Offset measures sum	S11	Calibration switch

Options :

Accessories		Reference
DIN rail fixing 125	A	336 002 00
Metal plate 125	B	336 001 00
May be used with :		
CY type load cells		
TRS type torque sensors		
Digital display		336 200 00
PID regulator board		336 304 00
PWR 2A power supply		336 600 01
PWR 5A 24 power supply		336 603 00

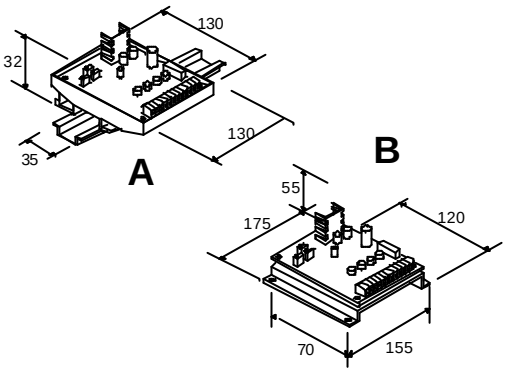

Note :

- Equipotential point is available on terminal 14.

- When earthing the secondary of the transformer, please use the opposite sketch :

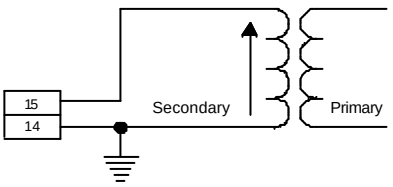

MEROBEL
Zone industrielle BP 79 45210 Ferrières - France
Tél.: +33/(0)2 38 94 42 44 - Fax: +33/(0)2 38 94 42 45
Internet : http://www.merobel.com

LC
Ampli STD

Réf : 336 410 02

Features :

Input Voltage	*[V]*	*24 AC/DC*
Max power consumption	*[VA]*	*3*
Strain gages bridge supply	*[V]*	*10 DC*
Output voltage	*[V]*	*0 to 10 DC*
Current (output voltage)	*[mA]*	*< 5*
Zero compensation		*± 50% of FS*
Measurement sensibility		*50 mV / V*
Time drift		*< 1%*
Room temperature	*[°C]*	*-10 to +40*
Fuse type T	*[A]*	*0.5*

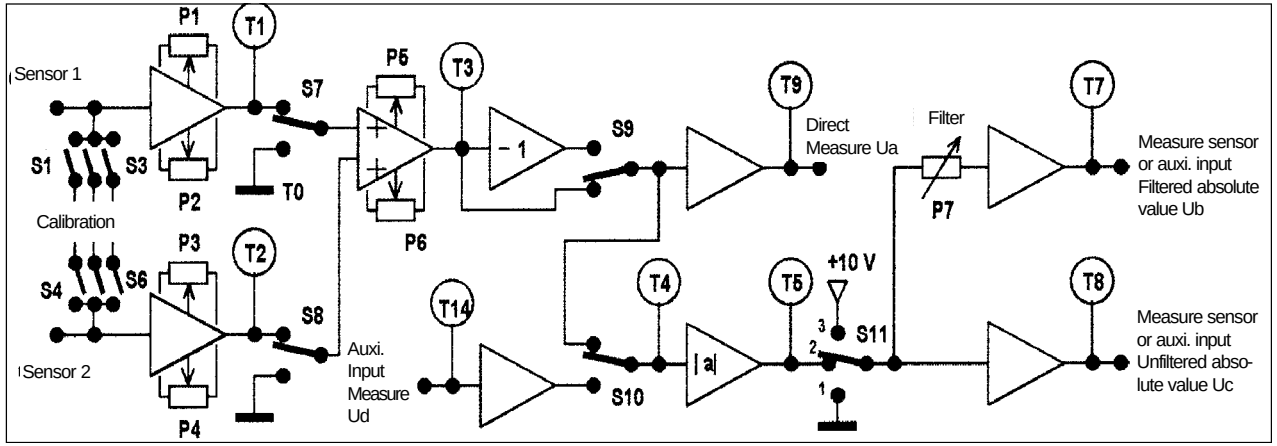

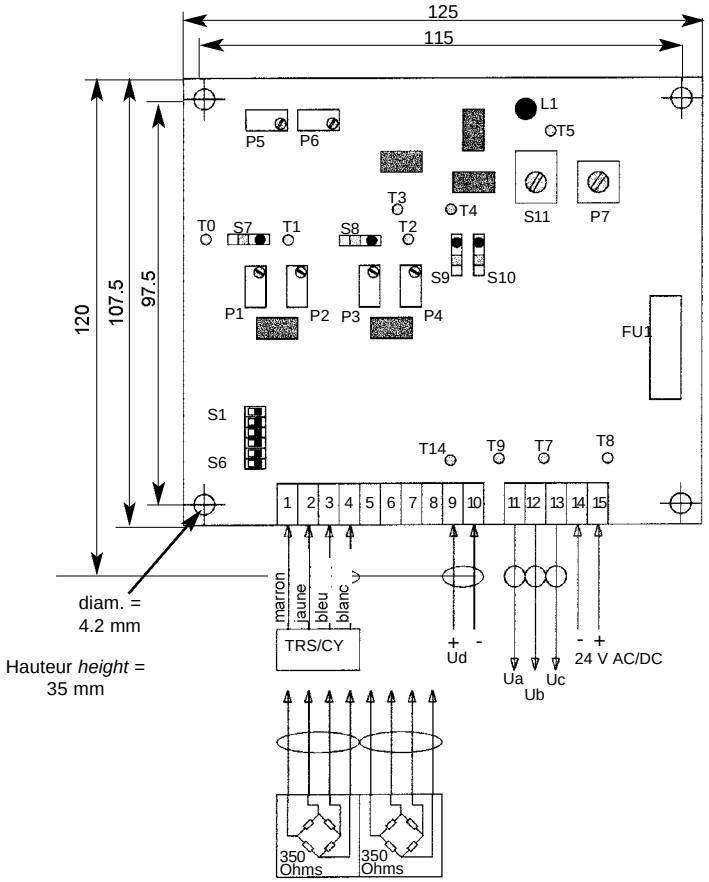

Electric connections

Connections

1	Supply sensor 1 (10 VDC)
2	Signal sensor 1 (+)
3	0 V
4	Signal sensor 1 (-)
5	Supply sensor 2 (10 VDC)
6	Signal sensor 2 (+)
7	0 V
8	Signal sensor 2 (-)
9	Input auxilliary signal Ud (-10 -> +10 VDC)
10	0 V
11	Output signal Ua (-10 -> 10 VDC)
12	Output signal filtered Ub (0 -> 10 VDC)
13	Output signal unfiltered Uc (0 -> 10 VDC)
14	0 V
15	Supply 24 V AC/DC

Test Points and Leds

T0	0 V
T1	Output sensor 1
T2	Output sensor 2
T3	Sum output Sensor 1 + Sensor 2
T5	Output Absolute value
T7	Output signal filtered Ub (0 -> 10 VDC)
T8	Output signal unfiltered Uc (0 -> 10 VDC)
T9	Output signal direct Ua (-10 -> 10 VDC)
T14	Input auxilliary signal Ud (-10 -> 10 VDC)
L1	Power ON 24 V AC/DC

Setting rules

1SENSOR

Measurement calibration for sensors type CY, TRS 50-100-200, TRS 05 or other

S1 to S6 on OFF.
S7, S9 and S10 apparent dot and S8 non-apparent dot.
Zero load:
-Set with P1 0.00 V on T1,
-Set with P5 0.00 V on T3.

Maxi. load, depending on sensors:

Sensor type CY	Sensor type TRS 50 - 100 - 200	Sensor type TRS 05	Other sensor
*S1 on ON. *Set with P2 the label-written value onT1. *Set with P6 the label-written value on T3. *S1 on OFF.	*S2 on ON. *Set with P2 the label-written value onT1. *Set with P6 the label-written value on T3. *S2 on OFF.	*S3 on ON. *Set with P2 the label-written value onT1. *Set with P6 the label-written value on T3. *S3 on OFF	*Set with P2 10.00V on T1 *Set with P4 10.00V on T2 *Set with P6 10.00V on T3 zero load : check the zero

Setting rules

2SENSORS

Measurement calibration for two sensors

S1 to S6 on OFF.
S7, S8, S9, S10 sur point apparent.
Zero load :
- Set with P1 0.00V on T1
- Set with P3 0.00V on T2
- Set with P5 0.00V on T3
Maxi. load:
- Set with P2 10.00V on T1
- Set with P4 10.00V on T2
- Set with P6 10.00V on T3
Zero load : Check the zero

Calibration auxiliary input

S10 on apparent dot

Calibration external display

S11 on position 1, output Ub/Uc to 0.00V
S11 on position 3, output Ub/Uc to 10.00 V

Caution : before turning ON, put S11 on position 2

Note :

- Equipotential point is available on terminal 14.
When earthing the secondary of the transformer, please use the underneath sketch :

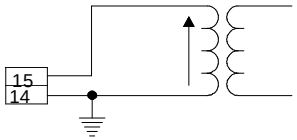

MEROBEL
Zone industrielle
45210 Ferrières
T 33 (0)2 38 94 42 44
F 33 (0)2 38 94 42 45
E-mail : merobel@merobel.com

iche NUGB336 410 02.01 0600